ESDALD05UG4

ESD Protection Diodes Array

Rev.01 - 08 May 2021 **Preliminary data sheet**

1. General description

The ESDALD05UG4 is a low capacitance TVS (Transient Voltage Suppressor) array designed to protect high speed data interfaces. It has been specifically designed to protect sensitive electronic components which are connected to data and transmission lines from over-stress caused by ESD (Electrostatic Discharge).

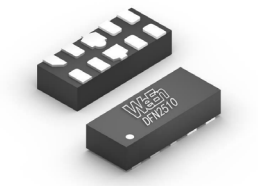

2. Features and benefits

- Peak pulse power 60W @ 8/20µs waveform
- Protects two or four I/O lines
- IEC 61000-4-2 (ESD) ±15kV(air), ±8kV(contact)
- IEC 61000-4-5 (Lightning) 4A (8/20µs)
- Low capacitance
- Low leakage current
- 5V operating voltage
- Solid-state silicon avalanche technology
- Device meets MSL 1 requirements
- Halogen free and RoHS compliant

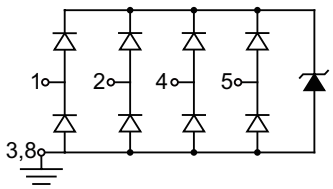

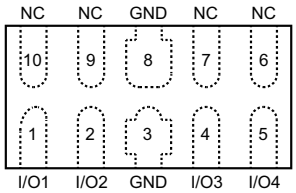

3. Applications

- High Definition Multi-Media Interface (HDMI)
- Digital Visual Interface (DVI)
- USB 1.1/2.0/OTG
- IEEE 1394 Firewire Ports
- Notebooks & Handhelds
- Projection TV & Monitors
- Set-top box
- Flat Panel Displays
- PCI Express

4. Ordering information

Type number	Package Name	Orderable part number	Packing method	Small packing quantity	Marking	Package issue date
ESDALD05UG4	DFN2510	ESDALD05UG4X	Tape and reel	3000	0524P	13-Oct-2020

5. Absolute maximum ratings

In accordance with the Absolute Maximum Rating System (IEC 60134).
T_j = 25 °C unless otherwise specified.

Symbol	Parameter	Conditions	Values	Unit
Absolute maximum rating				
P_{PPM}	peak pulse power	t_p = 8/20 µs	60	W
I_{PP}	peak pulse current	t_p = 8/20 µs	4	A
V_{ESD}	ESD per IEC 61000-4-2 (air) ESD per IEC 61000-4-2 (contact)		±15 ±8	kV kV
T_{stg}	storage temperature range		-55 to 150	°C
T_j	operating temperature range		-55 to 150	°C

6. Characteristics

T_j = 25 °C unless otherwise specified.

Symbol	Parameter	Condition	Min	Typ	Max	Unit
V_{RWM}	Reverse Working Voltage	Any I/O pin to GND	-	-	5	V
V_{BR}	Reverse Breakdown Voltage	I_T = 1 mA; Any I/O pin to GND	6	-	-	V
I_R	Reverse Leakage Current	V_{RWM} = 5 V; Any I/O pin to GND	-	-	100	nA
V_F	Diode Forward Voltage	I_F = 15 mA	-	0.85	1.2	V
V_C	Clamping Voltage	I_{PP} = 4 A; t_p = 8/20 µs; Any I/O pin to GND	-	-	15	V
C_J	Junction Capacitance	V_R = 0 V; f = 1 MHz; Between I/O pins	-	0.3	0.5	pF
		V_R = 0 V; f = 1 MHz; Any I/O pin to GND	-	0.6	1	pF

Note: I/O pins are pin 1,2,4,5

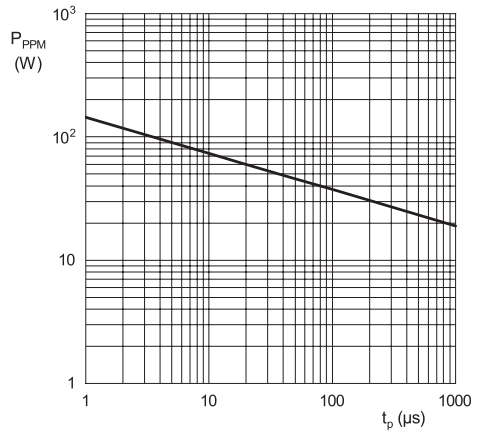

Fig. 1. Pulse rating curve

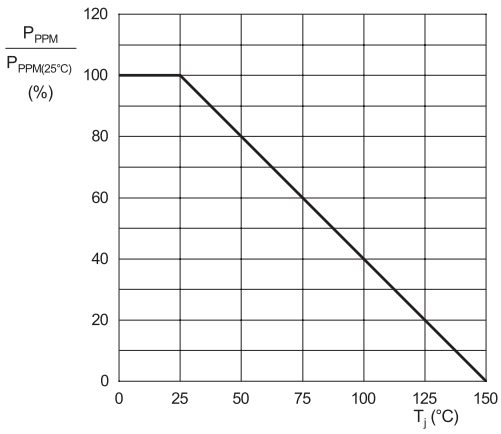

Fig. 2. Peak pulse power derating curve

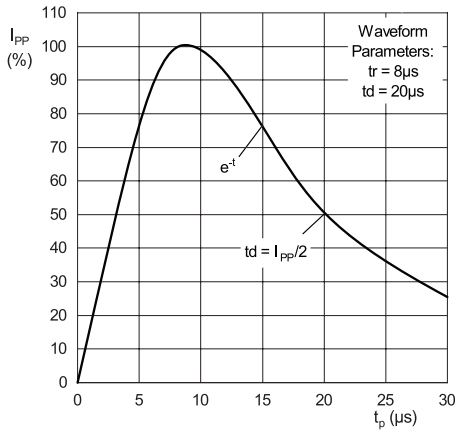

Fig. 3. Pulse waveform

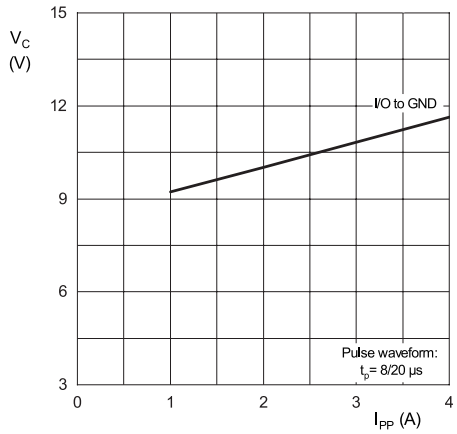

Fig. 4. Clamping voltage vs Peak pulse current

All information provided in this document is subject to legal disclaimers.

© WeEn Semiconductors Co., Ltd. 2021. All rights reserved

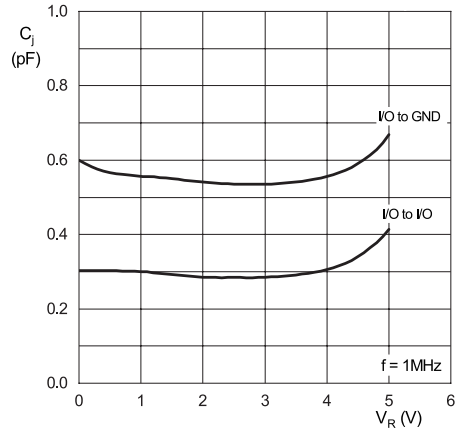

Fig. 5. Capacitance vs Reverse voltage

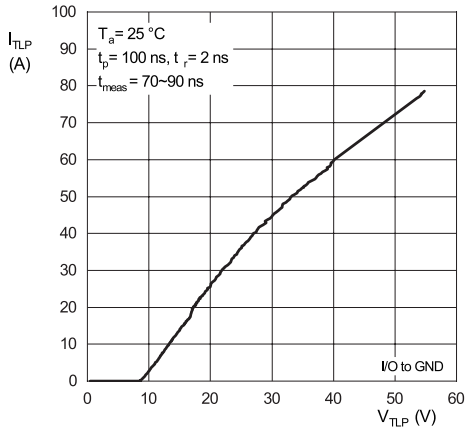

Fig. 6. TLP I-V Curve

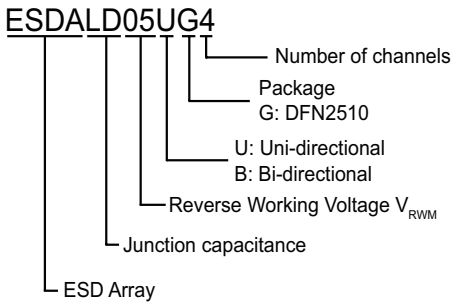

Fig. 7. Part numbering

All information provided in this document is subject to legal disclaimers.

© WeEn Semiconductors Co., Ltd. 2021. All rights reserved

7. Package outline

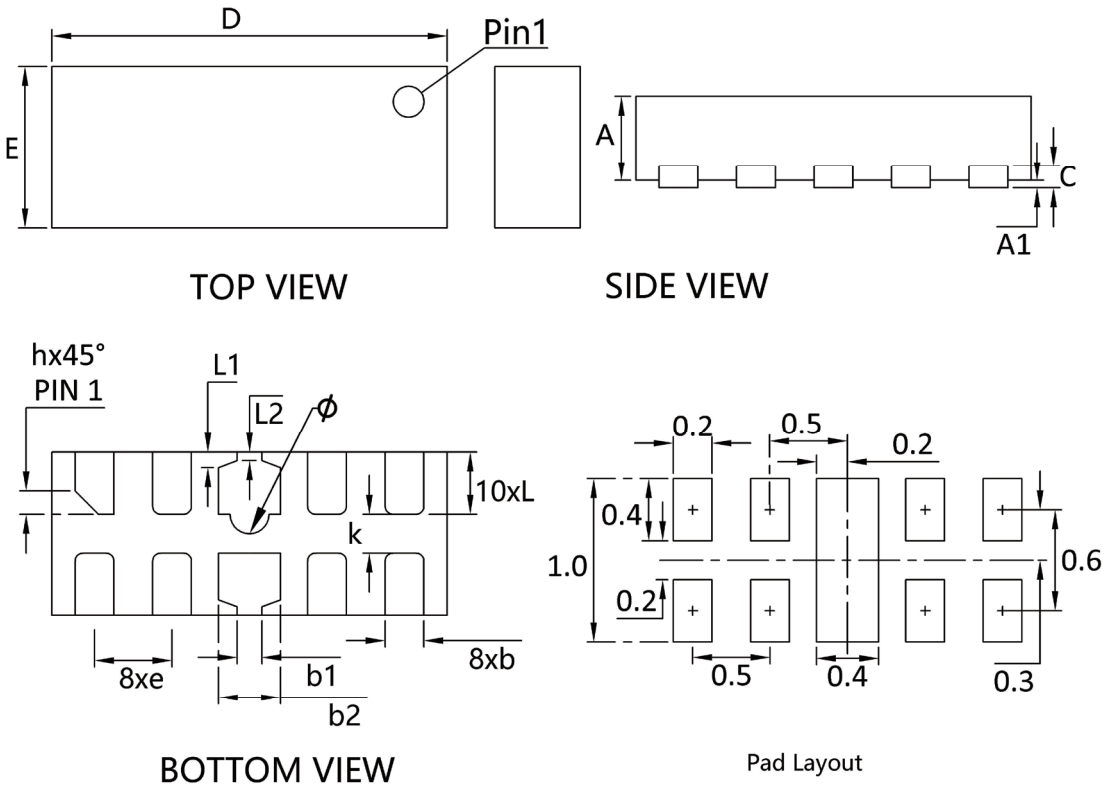

Symbol	Min	Nom	Max
A	0.500	0.550	0.600
A1	0.000	/	0.050
A2	0.102	0.152	0.202
b	0.150	0.200	0.250
b1	0.200	0.250	0.300
b2	0.350	0.400	0.450
D	2.450	2.500	2.550
E	0.950	1.000	1.050
e	0.450	0.500	0.550
h	0.080	0.120	0.150
k	0.150	0.200	/
L	0.350	0.400	0.450
L1		0.075 REF	
L2		0.050 REF	
ϕ	0.150	0.200	0.250

Note:
1. Controlling dimension : in millimeters.
2. General tolerance:+/-0.05mm.
3. The pad layout is for reference purposes only.

All information provided in this document is subject to legal disclaimers.
© WeEn Semiconductors Co., Ltd. 2021. All rights reserved

8. Legal information

Data sheet status

Document status [1][2]	Product status [3]	Definition
Objective [short] data sheet	Development	This document contains data from the objective specification for product development.
Preliminary [short] data sheet	Qualification	This document contains data from the preliminary specification.
Product [short] data sheet	Production	This document contains the product specification.

[1] Please consult the most recently issued document before initiating or completing a design.
[2] The term 'short data sheet' is explained in section "Definitions".
[3] The product status of device(s) described in this document may have changed since this document was published and may differ in case of multiple devices. The latest product status information is available on the Internet at URL http://www.ween-semi.com.

Definitions

Draft — The document is a draft version only. The content is still under internal review and subject to formal approval, which may result in modifications or additions. WeEn Semiconductors does not give any representations or warranties as to the accuracy or completeness of information included herein and shall have no liability for the consequences of use of such information.

Short data sheet — A short data sheet is an extract from a full data sheet with the same product type number(s) and title. A short data sheet is intended for quick reference only and should not be relied upon to contain detailed and full information. For detailed and full information see the relevant full data sheet, which is available on request via the local WeEn Semiconductors sales office. In case of any inconsistency or conflict with the short data sheet, the full data sheet shall prevail.

Product specification — The information and data provided in a Product data sheet shall define the specification of the product as agreed between WeEn Semiconductors and its customer, unless WeEn Semiconductors and customer have explicitly agreed otherwise in writing. In no event however, shall an agreement be valid in which the WeEn Semiconductors product is deemed to offer functions and qualities beyond those described in the Product data sheet.

Disclaimers

Limited warranty and liability — Information in this document is believed to be accurate and reliable. However, WeEn Semiconductors does not give any representations or warranties, expressed or implied, as to the accuracy or completeness of such information and shall have no liability for the consequences of use of such information. WeEn Semiconductors takes no responsibility for the content in this document if provided by an information source outside of WeEn Semiconductors.

In no event shall WeEn Semiconductors be liable for any indirect, incidental, punitive, special or consequential damages (including - without limitation - lost profits, lost savings, business interruption, costs related to the removal or replacement of any products or rework charges) whether or not such damages are based on tort (including negligence), warranty, breach of contract or any other legal theory.

Notwithstanding any damages that customer might incur for any reason whatsoever, WeEn Semiconductors' aggregate and cumulative liability towards customer for the products described herein shall be limited in accordance with the *Terms and conditions of commercial sale* of WeEn Semiconductors.

Right to make changes — WeEn Semiconductors reserves the right to make changes to information published in this document, including without limitation specifications and product descriptions, at any time and without notice. This document supersedes and replaces all information supplied prior to the publication hereof.

Suitability for use — WeEn Semiconductors products are not designed, authorized or warranted to be suitable for use in life support, life-critical or safety-critical systems or equipment, nor in applications where failure or malfunction of an WeEn Semiconductors product can reasonably be expected to result in personal injury, death or severe property or environmental damage. WeEn Semiconductors and its suppliers accept no liability for inclusion and/or use of WeEn Semiconductors products in such equipment or applications and therefore such inclusion and/or use is at the customer's own risk.

Quick reference data — The Quick reference data is an extract of the product data given in the Limiting values and Characteristics sections of this document, and as such is not complete, exhaustive or legally binding.

Applications — Applications that are described herein for any of these products are for illustrative purposes only. WeEn Semiconductors makes no representation or warranty that such applications will be suitable for the specified use without further testing or modification.

Customers are responsible for the design and operation of their applications and products using WeEn Semiconductors products, and WeEn Semiconductors accepts no liability for any assistance with applications or customer product design. It is customer's sole responsibility to determine whether the WeEn Semiconductors product is suitable and fit for the customer's applications and products planned, as well as for the planned application and use of customer's third party customer(s). Customers should provide appropriate design and operating safeguards to minimize the risks associated with their applications and products.

WeEn Semiconductors does not accept any liability related to any default, damage, costs or problem which is based on any weakness or default in the customer's applications or products, or the application or use by customer's third party customer(s). Customer is responsible for doing all necessary testing for the customer's applications and products using WeEn Semiconductors products in order to avoid a default of the applications and the products or of the application or use by customer's third party customer(s). WeEn does not accept any liability in this respect.

Limiting values — Stress above one or more limiting values (as defined in the Absolute Maximum Ratings System of IEC 60134) will cause permanent damage to the device. Limiting values are stress ratings only and (proper) operation of the device at these or any other conditions above those given in the Recommended operating conditions section (if present) or the Characteristics sections of this document is not warranted. Constant or repeated exposure to limiting values will permanently and irreversibly affect the quality and reliability of the device.

No offer to sell or license — Nothing in this document may be interpreted or construed as an offer to sell products that is open for acceptance or the grant, conveyance or implication of any license under any copyrights, patents or other industrial or intellectual property rights.

Export control — This document as well as the item(s) described herein may be subject to export control regulations. Export might require a prior authorization from competent authorities.

Non-automotive qualified products — Unless this data sheet expressly states that this specific WeEn Semiconductors product is automotive qualified, the product is not suitable for automotive use. It is neither qualified nor tested in accordance with automotive testing or application requirements. WeEn Semiconductors accepts no liability for inclusion and/or use of non-automotive qualified products in automotive equipment or applications.

In the event that customer uses the product for design-in and use in automotive applications to automotive specifications and standards, customer (a) shall use the product without WeEn Semiconductors' warranty of the product for such automotive applications, use and specifications, and (b) whenever customer uses the product for automotive applications beyond WeEn Semiconductors' specifications such use shall be solely at customer's own risk, and (c) customer fully indemnifies WeEn Semiconductors for any liability, damages or failed product claims resulting from customer design and use of the product for automotive applications beyond WeEn Semiconductors' standard warranty and WeEn Semiconductors' product specifications.

All information provided in this document is subject to legal disclaimers.

© WeEn Semiconductors Co., Ltd. 2021. All rights reserved

Translations — A non-English (translated) version of a document is for reference only. The English version shall prevail in case of any discrepancy between the translated and English versions.

Trademarks

Notice: All referenced brands, product names, service names and trademarks are the property of their respective owners.

All information provided in this document is subject to legal disclaimers.

© WeEn Semiconductors Co., Ltd. 2021. All rights reserved