KYCON, Inc. 305 Digital Drive, Morgan Hill, CA 95037 (408)494-0330

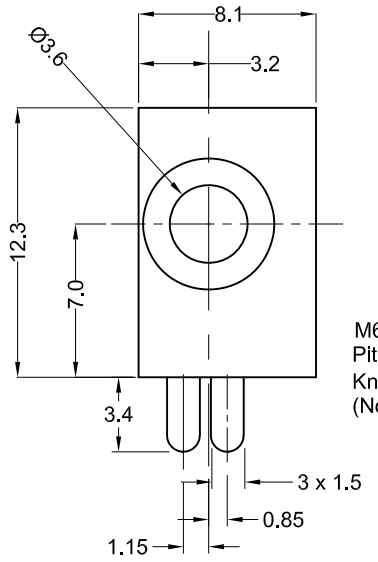

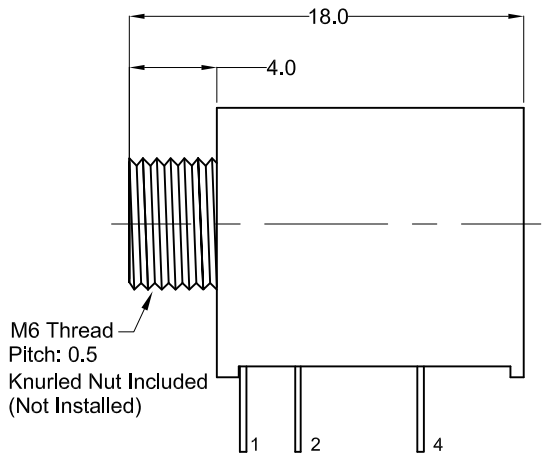

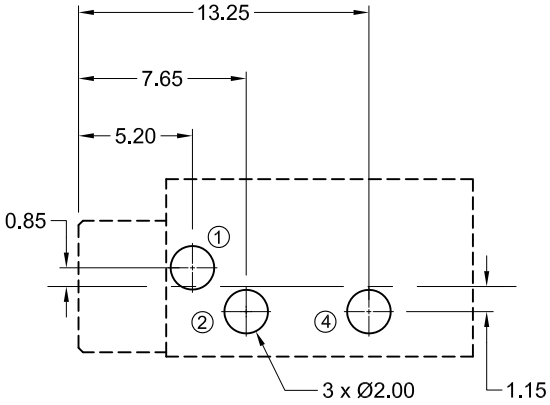

P.C.B LAYOUT
(BOTTOM VIEW)

Materials and Finish

Housing: PBT Thermoplastic
UL 94V-0 Rated, Black Color

Contact Material:
Pin #1: Brass, Matte Tin Plated
Pin #2 and Pin #4:
Phosphor Bronze, Matte
Tin Plated

Electrical Characteristics

Insulation Resistance:
100 Megohms at 500V DC

Contact Resistance:
50 milliohms Max.

Dielectric Withstanding Voltage:
500V AC RMS for 1 Minute

Mechanical Characteristics

Insertion Force: 0.3kg - 3.0kg
Withdrawal Force: 0.3kg - 3.0kg
Durability: 5000 Mating Cycles Min.
Operating Temperature:
-25°C to +85°C
Torque : 1.5lb-in Max.

M6 Knurled Nut Included
(not installed)

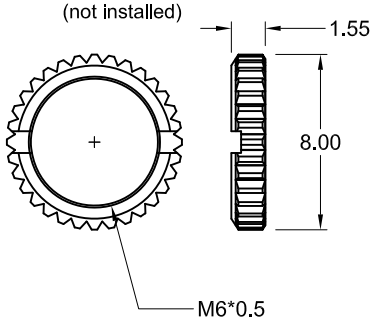

Schematic

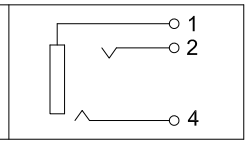

RoHS COMPLIANT

C US
LR78160

Tolerances
X.X ± 0.30
X.XX ± 0.15
Unless Stated Otherwise

REV.	DATE	DESCRIPTION	REV. BY	CHK. BY	DRAWN BY	DATE
A0	03/29/18	New Drawing	G. Serrato	C. Furumasu	G. Serrato	03/29/18
A1	11/06/18	Release Drawing DC 18-009	D. Shehan	C. Kelleher		
A2	12/05/18	ECO #18-061	G. Serrato	D. Shehan	UNITS	
					mm	

STX-3150-3C-1

Stereo Jack, Straight Black Cover, 3 Pos

Thread w/ Nut, RoHS Compliant

KYCON