REVISIONS					
REV	ECO	DESCRIPTION	DATE	BY	APPR
A1	-	RELEASED DRAWING	May-15-2019	Zaki	Tommy

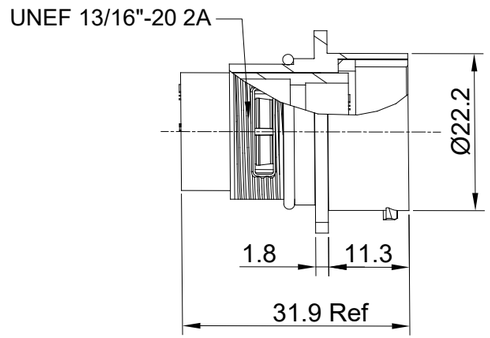

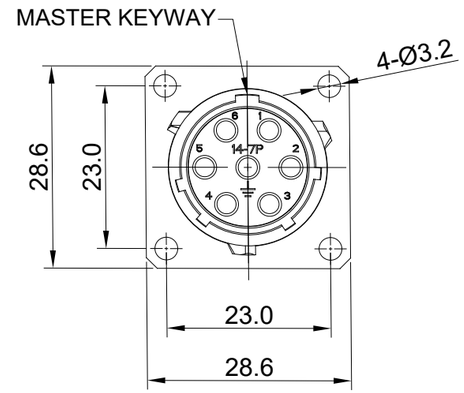

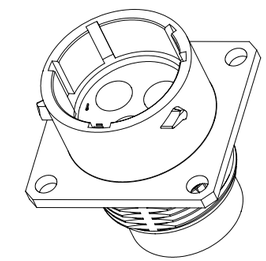

NOTES: (UNLESS OTHERWISE SPECIFIED)
1. MATERIAL:
   SHELL: ZINC ALLOY, NICKEL PLATED.
   INSERT: THERMOPLASTIC, UL94 V-0.
   SEAL GASKET: NBR/SILICONE RUBBER.
2. SPECIFICATIONS:
   2.1 RATED CURRENT: 13A (MAX)
   2.2 RATED VOLTAGE: 600V AC/DC
   2.3 OPERATING TEMPERATURE: SEE CHART.
   2.4 DIELECTRIC WITHSTANDING VOLTAGE: LESS THAN 2 MILLIAMPS CURRENT LEAKAGE@2500 VOLTS AC.
   2.5 INSULATION RESISTANCE: 5000 MEGOHMS MIN.
   2.6 IP--CLASS: IP67.
   2.7 MATING CYCLES DURABILITY: 500 CYCLES MIN.
   2.8 RoHS COMPLIANT.
3. SUITABLE CONTACTS : 16# CONTACTS
4. ALL DIMENSIONS ARE FOR REFERENCE USE ONLY.

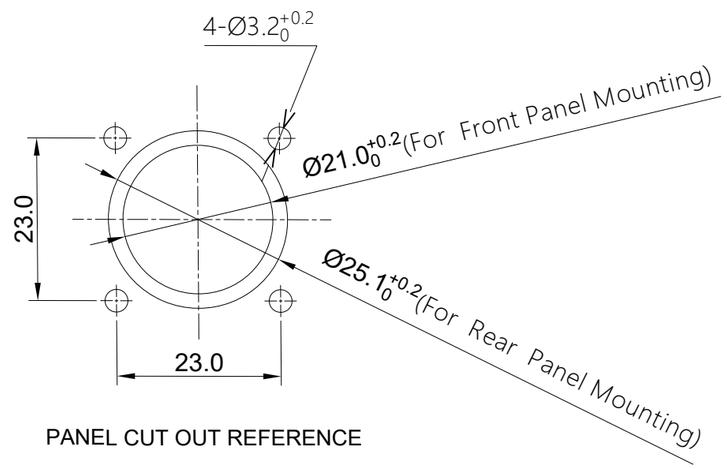

PANEL CUT OUT REFERENCE

KEY POS	PART NUMBER	
	-40°C ~ 105°C	-40°C ~ 125°C
N	RT00147PNH	RT00147PNH03
W	RT00147PWH	RT00147PWH03
X	RT00147PXH	RT00147PXH03
Y	RT00147PYH	RT00147PYH03
Z	RT00147PZH	RT00147PZH03

QUANTITY	PART NUMBER	DESCRIPTION	ITEM

MATERIALS LIST

UNLESS OTHERWISE SPECIFIED
1) All dimensions are in metric(mm).
2) Tolerances are as follows:
1 PL DEC ±0.30 | Fractions ±1/64
2 PL DEC ±0.15 | Angles ±1°
3 PL DEC ±0.08
3) Note reference = X

MATERIAL SPECIFICATIONS:

PROCESS SPECIFICATIONS:

NEXT ASS'Y:

SIGNATURES		DATE
DRAWN:	Zaki	May-15-2019
CHECKED:	Martin	May-15-2019
ENGINEER:		
APPROVAL:	Tommy	May-15-2019
CUSTOMER:		

THIS DRAWING IS SUPPLIED FOR INFORMATION ONLY. DESIGN FEATURES, SPECIFICATIONS AND PERFORMANCE DATA SHOWN HEREON ARE THE PROPERTY OF THE AMPHENOL CORPORATION. NO RIGHTS OF REPRODUCTION ARE IMPLIED. ALL DIMENSIONS ARE SUBJECT TO NORMAL MANUFACTURING VARIATIONS.

Amphenol
Sine Systems - www.amphenol-sine.com
44724 Morley Drive
Clinton Township, MI 48036

ECO-MATE,RECEPTACLE,
SIZE 14,7POS,PIN.

SIZE	TYPE	DWG NO:	REVISION
B	C-	RT00147P*H**	A1

SCALE: NONE SHEET 1 OF 1

TITLE: ECO-MATE,RECEPTACLE,SIZE 14,7POS,PIN.
DWG NO: RT00147P*H**
REV: A1
SH: 1
OF: 1