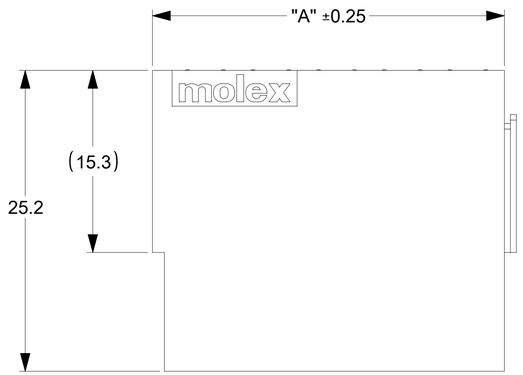

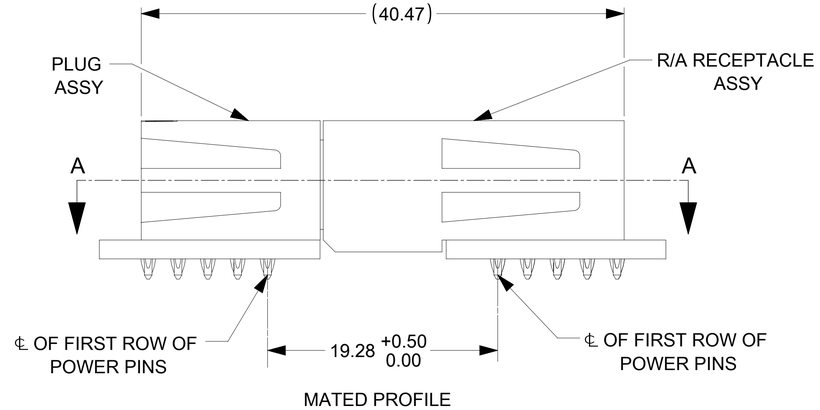

MATED PROFILE

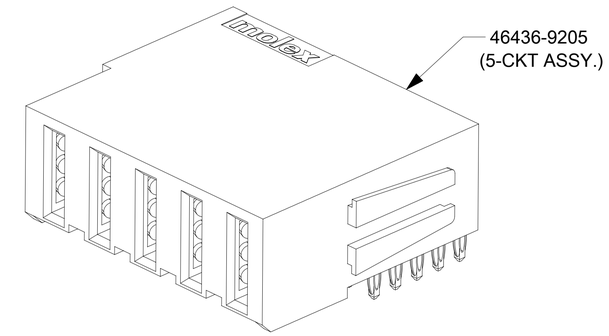

R/A RECEPTACLE ASSY.
(PRESS-FIT TAIL VERSION)
P/N: 46436-92** (** - 01 TO 10)

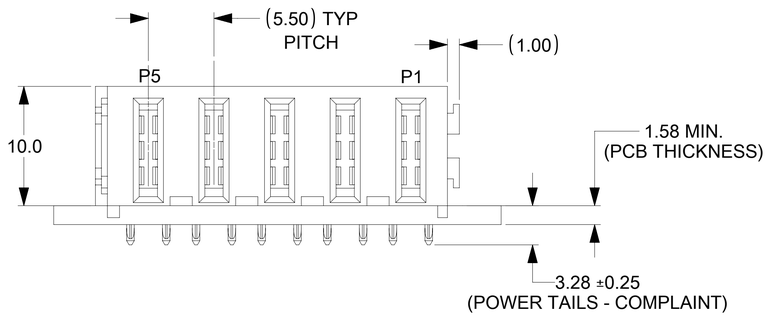

PARTIAL OF A-A
(POWER CKTS ARE ALIGNED)

POWER CKT SIZE	FG PART NUMBER	CONFIGURATION	DIM "A"	HOLE COUNT "H1"	MATES WITH PLUG ASSY.
10	46436-9210	J-10P-J	57.00	100	46437-9210
9	46436-9209	J-9P-J	51.50	90	46437-9209
8	46436-9208	J-8P-J	46.00	80	46437-9208
7	46436-9207	J-7P-J	40.50	70	46437-9207
6	46436-9206	J-6P-J	35.00	60	46437-9206
5	46436-9205	J-5P-J	29.50	50	46437-9205
4	46436-9204	J-4P-J	24.00	40	46437-9204
3	46436-9203	J-3P-J	18.50	30	46437-9203
2	46436-9202	J-2P-J	13.00	20	46437-9202
1	46436-9201	J-1P-J	7.50	10	46437-9201

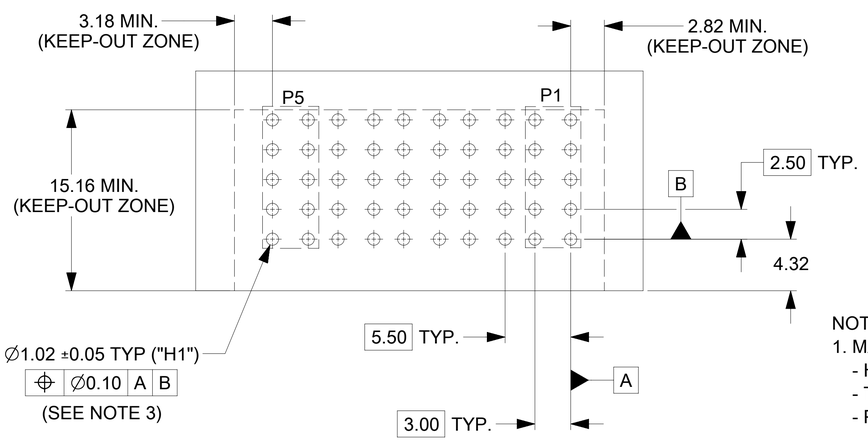

NOTES:
1. MATERIAL:
   - HOUSINGS: LCP UL94, V-0, COLOR : BLACK
   - TERMINALS: HIGH CONDUCTIVITY COPPER ALLOY
   - PLATING: 1.27 MICROMETER (50 MICROINCH) NICKEL OVERALL WITH
     2.54 MICROMETER (100 MICROINCH) SELECTIVE TIN ON TAILS AND
     0.762 MICROMETER (30 MICROINCH) SELECTIVE GOLD ON CONTACT AREA
2. PACKAGING: ASSEMBLIES TO BE TRAY PACKED PER PACKAGING SPEC: 464361001-PK
3. PLATED THRU HOLE SIZE, REFER TO PS-46436-100 FOR DETAILS
4. PRODUCT SPEC: PS-46436-100
5. PRODUCT TO MEET RoHS REQUIREMENTS
6. ASSEMBLY MATES TO MOLEX PLUG ASSEMBLY 46437-92** (SEE TABLE) ** -01 TO 10.
7. TAIL DESIGN: COMPLIANT PINS
8. POWER CONTACTS ARE LUBRICATED.
9. APPLICATION SPEC: AS-46436-100.
10. MOLEX LOGO TO BE LOCATED APPROXIMATELY AS SHOWN

THIS DRAWING CONTAINS INFORMATION THAT IS PROPRIETARY TO MOLEX ELECTRONIC TECHNOLOGIES, LLC AND SHOULD NOT BE USED WITHOUT WRITTEN PERMISSION

DIMENSION UNITS	SCALE
mm	4:1

GENERAL TOLERANCES (UNLESS SPECIFIED)

ANGULAR TOL	±	0.5 °
4 PLACES	±	
3 PLACES	±	
2 PLACES	±	0.25
1 PLACE	±	0.25
0 PLACES	±	

DRAFT WHERE APPLICABLE MUST REMAIN WITHIN DIMENSIONS

CURRENT REV DESC: INITIAL RELEASE

EC NO: 711341
DRWN: GJEEVANSURES 2022/06/18
CHK'D: GJEEVANSURES 2022/06/22
APPR: HTHYAGARAJ 2022/06/30

INITIAL REVISION:
DRWN: BKOSTIC 2010/06/30
APPR: APATEL 2010/07/15

molex

DC POWER RECEPTACLE MOD
TEN60, 5.5 PITCH R/A 1-10 CKT

PRODUCT CUSTOMER DRAWING

DOCUMENT NUMBER	DOC TYPE	DOC PART	REVISION
SD-46436-9000	PSD	001	C4

THIRD ANGLE PROJECTION	DRAWING	SERIES	MATERIAL NUMBER	CUSTOMER	SHEET NUMBER
	D-SIZE	46436	REFER TABLE	GENERAL MARKET	1 OF 1

DOCUMENT STATUS	P1	RELEASE DATE	2022/06/30 06:45:07