GENERAL TOLERANCE										USED ON
10 MAX	30 MAX	50 MAX	70 MAX	100 MAX	120 MAX	250 MAX	250 OVER	ANGLE	ECCENT	
±0.15	±0.20	±0.30	±0.40	±0.50	±0.75	±0.90	±1.4	±0.5°	0.1	

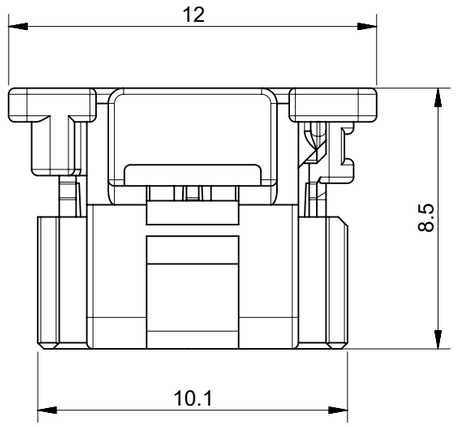

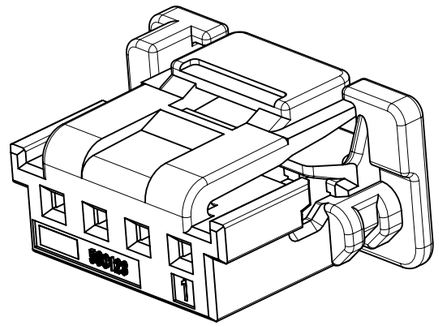

ISO VIEW

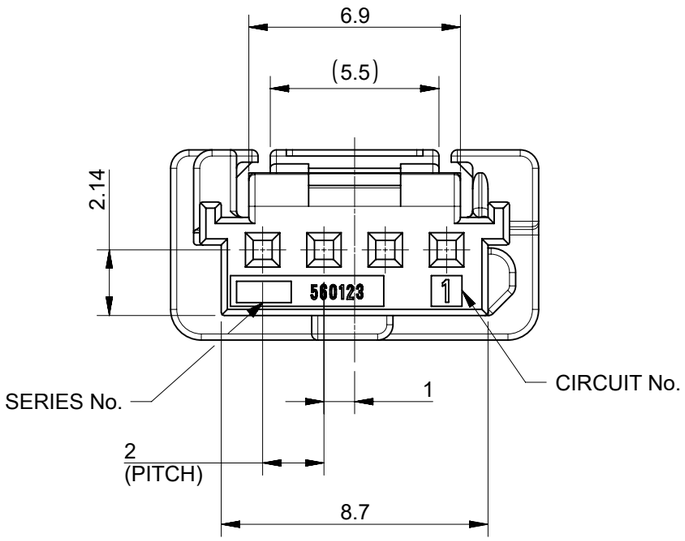

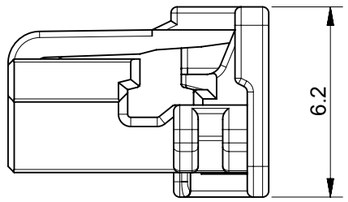

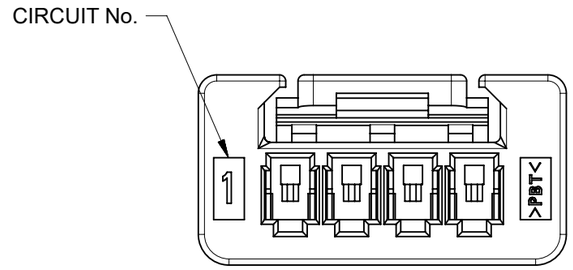

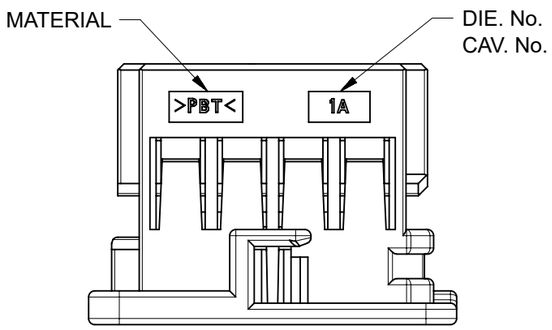

MATERIAL NUMBER

ORDER NO.	MATERIAL NO.	COLOR
560123-0400	5601230400	WHITE
560123-0401	5601230401	BLACK
560123-0402	5601230402	RED
560123-0404	5601230404	BLUE

NOTES:
1. MATERIALS : POLYESTER (PBT), GLASS UNFILLED, UL 94V-0
2. MATE WITH : 502352, 560020 SERIES
3. APPLICABLE TERMINAL : 560124 SERIES
4. APPLICABLE ISL : 560125 SERIES
5. GENERAL TOLERANCE : SEE TABLE
6. EVL AND RoHS COMPLIANT
7. PRODUCT SPECIFICATION : PS-560123-00*
8. PACKING SPECIFICATION : PK-560123-001

THIS DRAWING CONTAINS INFORMATION THAT IS PROPRIETARY TO MOLEX ELECTRONIC TECHNOLOGIES, LLC AND SHOULD NOT BE USED WITHOUT WRITTEN PERMISSION

FUNCTIONAL SYMBOLS: FA = 0, FC = 0, FP = 0
DIVISIONAL SYMBOLS

DIMENSION UNITS	SCALE
mm	5:1

GENERAL TOLERANCES (UNLESS SPECIFIED)

ANGULAR TOL	± °
4 PLACES	±
3 PLACES	±
2 PLACES	±
1 PLACE	±
0 PLACES	±

DRAFT WHERE APPLICABLE MUST REMAIN WITHIN DIMENSIONS

CURRENT REV DESC:

EC NO: 668822
DRWN: SAKIM 2021/07/01
CHK'D: HIIJIMA 2021/07/05
APPR: HIIJIMA 2021/07/05

INITIAL REVISION:
DRWN: YIBAEK 2014/07/03
APPR: SRTAK 2014/08/26

molex

NEW 2.0 PITCH W/B CONN.
0.5mm REC. 4WAY HSG DURACLIK ISL SERIES

PRODUCT CUSTOMER DRAWING

DOCUMENT NUMBER	DOC TYPE	DOC PART	REVISION
SD-560123-002	PSD	001	C3

THIRD ANGLE PROJECTION	DRAWING	SERIES	MATERIAL NUMBER	CUSTOMER	SHEET NUMBER
	A3-SIZE	560123	SEE TABLE	GENERAL MARKET	1 OF 1

DOCUMENT STATUS	P1	RELEASE DATE	2021/07/05 01:54:01

FORMAT: molex_landscape_A3
REVISION: J
DATE: 2020/01/16